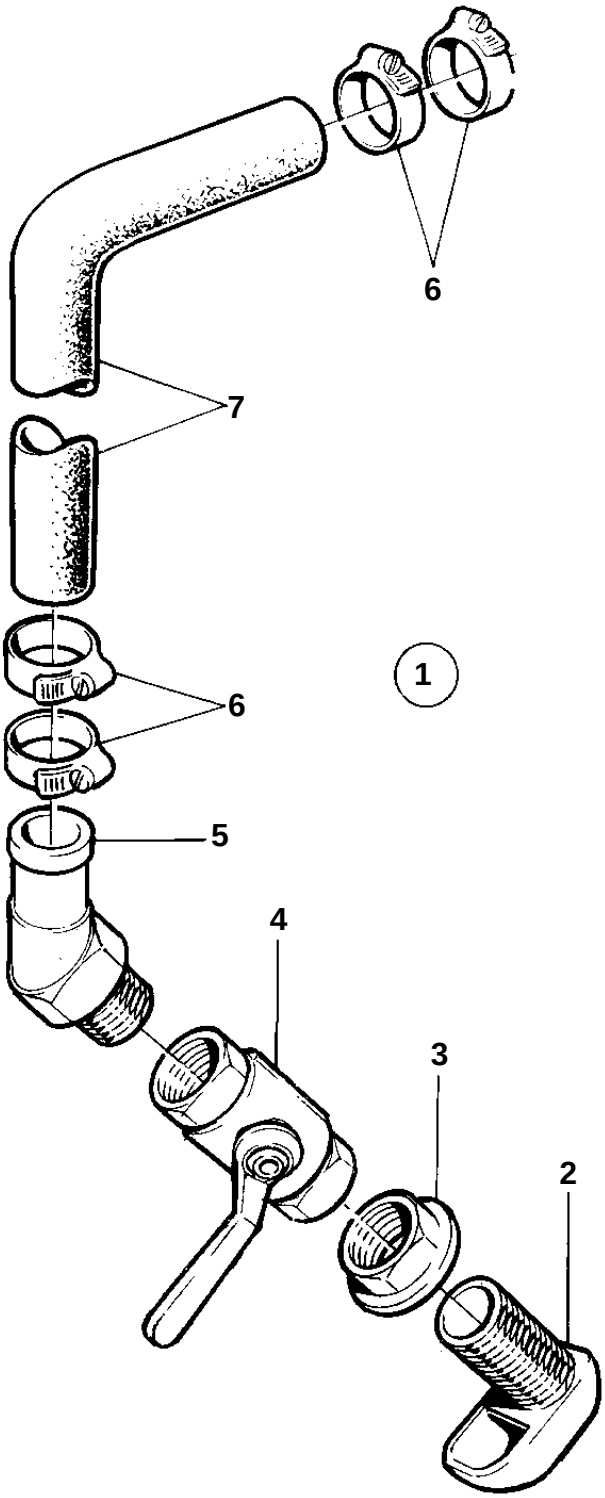


9574

D2-75A

| REF | PART NO. | QTY | DESCRIPTION | | NOTES |
|---|---|---|---|---|---|
| 1 | 1140129 | 1 | Cooling wate inlet | | |
| 2 | 836876 | 1 | · Strainer | | |
| 3 | 836879 | 1 | · Nut | | |
| 4 | 1140125 | 1 | · Ball valve | | D=25mm |
| 5 | 828696 | 1 | · Hose attachment | | 45° |
| 6 | 961670 | 2 | · Hose clamp | | |
| 7 | 1140664 | X | Exhaust hose | | |